RETROFIT OF HISTORIC 3-STORY NONDUCTILE CONCRETE STRUCTURE USING PERFORMANCE BASED ENGINEERING AND INNOVATIVE TECHNOLOGIES

Lon M. Determan, S.E.[1] and Kit Miyamoto, M.S., S.E.[2]

Abstract

This paper presents how performance-based engineering made possible the transformation of a deteriorated, historic 3-story automobile sales and service center into a thriving, 4-story, mixed-use development. The structural rehabilitation included 1) adding carbon fiber reinforced polymers to existing 2nd and 3rd floor concrete slabs to increase live load capacity, 2) providing braced frames with friction dampers to add stiffness and damping, 3) adding helical piers to reinforce foundations, and 4) adding a new lightweight 4th floor level. Response spectrum, nonlinear static, and time history analyses were performed to assess the seismic performance. Analyses showed that the performance level of the rehabilitated structure meets or exceeds code-level life safety criteria. The innovative approach to design resulted in a very cost effective rehabilitation of this historic landmark building, which was completed in 2003.

Introduction

This paper presents the performance-based evaluation and design of the East End Lofts located in Downtown Sacramento, California. Built in 1922, this cast-in-place (CIP) concrete structure was originally known as the Elliott Building, and served as a sales and service center for the Elliott Pontiac automotive dealership. Later, the building became the home of another automotive showroom and service center, Mike Daugherty Chevrolet (Fig. 1). The renovation of this structure included transforming the ground and 2nd floors to restaurants and offices, respectively, and the 3rd and a new 4th floor into residential lofts.

Figure 1. Mike Daugherty Chevrolet, 2001

[1] President & CEO, Miyamoto International, Inc., West Sacramento, CA 95691
[2] Principal, Miyamoto International, Inc., West Sacramento, CA 95691

Since the renovation included a change in occupancy and adding a new 4th floor level to the existing building, a code upgrade was required. The applicable building code was the 1997 Uniform Building Code (ICBO, 1997). The existing 40,700-sf historic structure had three stories and a small partial basement. The structure consisted of lightly reinforced, non-ductile concrete frames and shear walls supporting two levels of concrete floor slabs and a wood roof. Foundations for the structure consisted of continuous and isolated pad footings. Due to soft soil conditions and a failed underground water line, significant foundation settlement had occurred at two columns causing moderate cracking in the beam-column joints at the 2nd and 3rd floors. A solid concrete wall at the property line and flexible concrete frames at the other three exterior walls resulted in highly torsional plan irregularity.

To access the performance of the existing structure, a detailed analytical model was developed based on as-built conditions and FEMA 273 guidelines (BSSC, 1997). A dynamic analysis of this model verified the expected highly torsional response and excessive story drifts. Other issues of concern included potential foundation settlement, inadequate floor live load capacity, inadequate ductility in existing concrete frame elements, and falling hazards from non-structural brick infill.

In order to add the new 4th floor level, address the above-mentioned structural deficiencies, and mitigate hazards from nonstructural components, the following actions were taken:

1. Existing foundations were reinforced, and new foundations were anchored with helical piers,
2. Carbon fiber reinforced polymers (FRP) were applied to the existing 2nd and 3rd concrete floors,
3. Steel angle reinforcement was epoxied to existing brick components, and
4. Braced frames with friction damping devices were added to the three exterior storefront elevations.

A new analytical model was developed including the friction dampers and the new mass at the 4th level, which was then subjected to response spectrum, non-linear static pushover, and time history analyses. The pushover analysis was performed to capture the effects of the damper hinging (slip) as well as to measure global system performance. The time history analyses were then performed to provide a second check and verify the results of the pushover analysis. The results of these analyses indicated significantly reduced torsional response and story drifts, as well as adequate capacity and ductility of existing structural elements.

Description of Original Structure

The Elliott Building is located on the corner of 16th & J Streets in downtown Sacramento, California. Although as-built documentation was not available, extensive field surveys and testing were performed to assess the existing conditions (Wallace-Kuhl, 2001). The building measures approximately 80’-0” in the E-W direction and 160’-0” in the N-S direction. Typical bay widths range from 17’-0” to 22’-0”. The building originally had three stories and a partial basement. The 1st story is approximately 17’-0” high, while the average height of the 2nd and 3rd stories is 14’-0”. A parapet with an average height of 3’-0” extended above the roof around the

full perimeter. The west exterior wall is a 5” thick solid concrete wall, while the remaining exterior elevations are storefronts consisting of concrete beams and columns with partial brick infill walls (Fig. 2). Brick veneer was cast into the exterior skin of the concrete frame elements. Along the inside face of the west concrete wall was a concrete ramp between the ground and 2nd, and the 2nd and 3rd floors, respectively.

The ground floor slab was a 5” concrete slab-on-grade, except over the partial basement. The slab at the north end, formerly used as the showroom floor, was in good condition, has a tile finish deemed “historically significant,” and was to be preserved as much as feasibly possible. The remainder of the slab-on-grade had significant cracking at the perimeter walls and around interior columns. Foundations consist of shallow spread and continuous footings, and bear on loose to medium-dense silts and fines. Typical foundation settlements were estimated at 2”, except at two locations where column pad footings appear to have settled as much as 9”, reportedly resulting from a damaged underground water line. At these locations, moderate cracking was observed at the beam-column joints, one of which had been partially repaired in the past with a concrete collar at the top of the 1st floor column.

Typical interior columns are 18”-diameter at the 1st story, and 16”-diameter at the 2nd and 3rd stories. Reinforcement consists of (4) 5/8”-square longitudinal bars with 0.30”-diameter smooth spiral ties at 3-4” pitch. Typical interior beams at the 2nd and 3rd floors also have minimal reinforcement, vary in cross section, and are haunched at the interior columns. Typical floor slabs are of one-way construction and are 4” minimum thick at midspan, and tapered to 7” thick at the beams. Slab reinforcement consists of draped 3/8”-square bars at 8” o.c. The 5” concrete exterior wall at the west elevation was reinforced with 3/8”-square bars at 24” o.c. each way. Typical exterior columns at the north, east and south elevations are 16”-, 14”- and 12”-square at the 1st, 2nd and 3rd stories, respectively, and have the same reinforcement as the typical interior columns. The spandrel beams are 10” wide and vary in depth between 37” and 41” deep with (2) 1”-square longitudinal bars at top and bottom and 3/8”-square stirrups at 12” o.c. The existing roof structure consisted of wood-framed construction. Material testing consistent with FEMA 273 guidelines was performed on existing elements (Wallace-Kuhl, 2001). Material strengths are presented in Table 1.

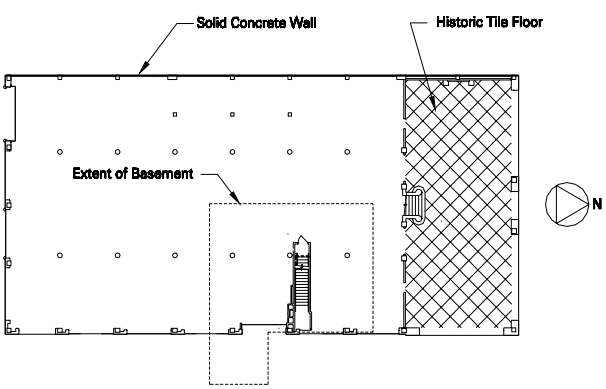

Figure 2. Plan view of 1st floor

Table 1. Existing material strengths

Component	Average Strength
Concrete Floor Slabs	5290 psi
Concrete Walls	4040 psi
Concrete Columns	3080 psi
Concrete Beams	3280 psi
Reinforcement	42.5 ksi (yield)

Note: Concrete consisted of hard rock aggregates with an average density of 153 pcf

Structural Renovation

New 4th Floor Lofts. One of the major objectives of the renovation included adding a new 4th story for residential lofts. This was achieved by replacing the existing roof structure with a light wood-framed floor system, over which a wood-framed shear/bearing wall system was placed. Steel WF transfer beams support the new shearwalls. New interior tube steel columns were placed directly over existing concrete columns at the 3rd floor, and ran continuous up to the 4th story roof. The existing columns were analyzed for the new gravity loads and found to be adequate. To account for the additional loading to the new foundations, the existing pad footings were reinforced by widening the existing pads and epoxy-doweling the new concrete to the existing concrete.

New Offices at 2nd Floor. Another major objective of the renovation was to change the occupancy of the 2nd floor from a garage-type occupancy rating to that of an office. In order to achieve this goal, the existing concrete floor slab and framing had to be capable of supporting the corresponding new design loads. For the former automotive service center, a design live load (LL) of 50 psf would be applicable. The new applicable design loads include a LL of 50 psf *and* a partition load of 20 psf – a 40% increase. In addition to the above-mentioned loads, exit corridors had to be designed for LL of 100 psf. Existing slab and beam elements were evaluated and found to have insufficient flexural capacity. Therefore, in order to increase the flexural capacity of subject elements, FRP was selectively placed above and/or below existing concrete slabs and beams in order to increase negative and positive flexural capacity, respectively. FRP wrap was also provided at damaged beam-column joints at severely settled columns.

Seismic Evaluation

Analytical Model & Seismic Analysis of Original Structure. The computer program *ETABS Nonlinear* (CSI, 2002) was used to model and evaluate the existing structure.

- Frame properties. Frame sections, reinforcement, and material properties were taken from the field survey and testing previously discussed. The existing concrete slabs and walls were defined as shell elements in order to capture both the in-plane and out-of-plane stiffness, and to distribute the gravity loads to the framing members. The 4th level was modeled as a plate element so as to neglect in-plane stiffness of the relatively flexible wood diaphragm. Dimensions were measured centerline-to-centerline (i.e., no rigid-end offsets were specified), however, cracked section stiffness was captured by specifying 50% of gross moments of inertia, as recommended by FEMA 273 for flexural members.

- Loads. Gravity loads included member self weights, partition loads at the 2nd floor offices, and miscellaneous mechanical and finish elements. Live loads included typical code prescribed live loads. Loads from the new 4th floor penthouses were added to the 4th level as a uniformly distributed area load.

- Inertial Mass. The mass used in the lateral analyses included element self-weights, one-half of the specified partition load, and other specified miscellaneous dead loads. Code-mandated 5% mass offsets for each quadrant and the appropriate accidental torsion amplifications were

applied at the 2nd and 3rd floors by applying an equivalent moment at the center-of-mass of each respective floor.

Results of Analysis of Original Structure. A static code analysis yielded column axial and flexural demand-capacity ratios as high as 34 occurring along the east exterior elevation. Soft story behavior was evident with maximum drifts at the 2nd story of approximately 3.7" (1.7%) and 6.9" (3.2%) in the longitudinal and transverse directions, respectively (Fig. 3). As expected, highly torsional behavior was also observed (Fig. 4). The need for a seismic retrofit was, thus, very apparent.

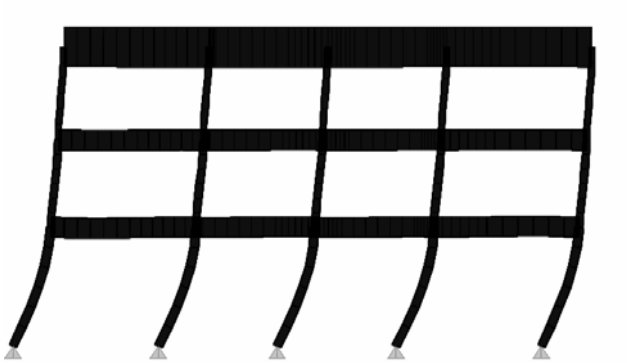

Figure 3. Soft-story response (South elevation)

Figure 4. Torsional response (plan)

Seismic Retrofit

Braced frames were added to the north, south and east elevations at the bottom three stories in order to add strength and stiffness to the soft storefront elevations and reduce torsional response. However, with increased stiffness comes reduced structural period, and an increased seismic response (i.e., acceleration). In order to control this increased seismic response, the braces were equipped with energy dissipaters in the form of in-line friction dampers. Concrete collector beams were placed *below* the slab-on-grade, and *above* the 2nd and 3rd floor slabs. Braced frame columns were founded on new, stiff steel transfer beams spanning over existing footings to helical piers at each end. This enabled isolation of existing foundations from seismic loads (Fig. 5a). At brick infill wall segments, steel angles were attached with epoxied bolts in order to stabilize and mitigate falling hazards.

Friction Dampers. Slotted bolted energy dissipaters (friction dampers) have been researched (Grigorian, Yang and Popov, 1992) and implemented into several structural upgrades in recent years. Friction dampers provide an economical alterative to more costly energy dissipation systems. They consist of readily available mill quality materials including steel and brass plates, and can be assembled in the field. Slotted bolted friction dampers consist of a main plate (attached to a brace) with slotted holes sandwiched between thin brass plates inside of steel side plates. The 5-plate assembly is clamped together with fully tensioned high strength bolts (Figs. 6 & 7). As the frame displaces and drives the brace and slotted plate between the rigid brass-steel side-plate assembly, friction occurs between the slotted plate and brass plates

proportional to the clamping force. This, in turn, converts the kinetic energy into thermal energy, which dissipates into the environment. Provided strict quality assurance and field inspections are provided in order to ensure conformance with construction details, these devices will provide stable and consistent behavior capable of dissipating large amounts of energy, as is apparent from the hysteresis diagrams shown in Fig. 8. Provided displacements (story drifts) are small, inelastic deformation of the frame elements can be minimized, at the least, and avoided altogether, at best. The results of the testing performed showed that a slip force of 7.5 kips is obtained for each ½”-diameter ASTM A325 bolt. Therefore, individual dampers can be calibrated for their respective demands on this basis (Fig. 5b). Since the owners had neither the budget nor the schedule allowance for a project-specific damper testing program, the specifications from these testing regimens were strictly adhered to. Slot length for the damper unit was initially developed from the pushover analysis, and then verified with the time history analysis in order to ensure against “bottoming out” of the unit.

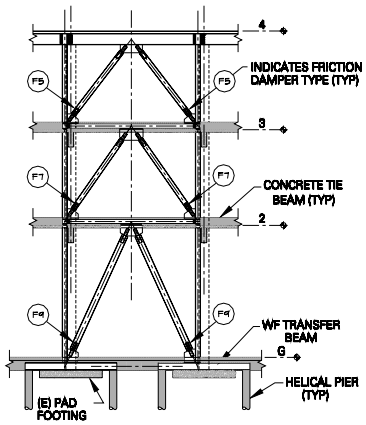

(a)

FRICTION DAMPER SCHEDULE

MARK	NUMBER BOLTS	CAPACITY (kips)	DIAGONAL MEMBER	BOLT LAYOUT	SLOT LENGTH
F5	5	37.5	W8X24	TYPE 1	3"
F6	6	45	W8X24	TYPE 1	3"
F7	7	52.5	W8X24	TYPE 1	3"
F8	8	60.0	W8X24	TYPE 1	3"
F9	9	67.5	W10X33	TYPE 2	3"
F15	15	112.5	W10X33	TYPE 2	3"
F33	33	247.5	W10X60	TYPE 2	3"

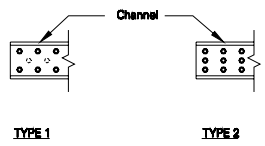

(b)

Figure 5. (a) Braced frame elevation, and (b) damper schedule

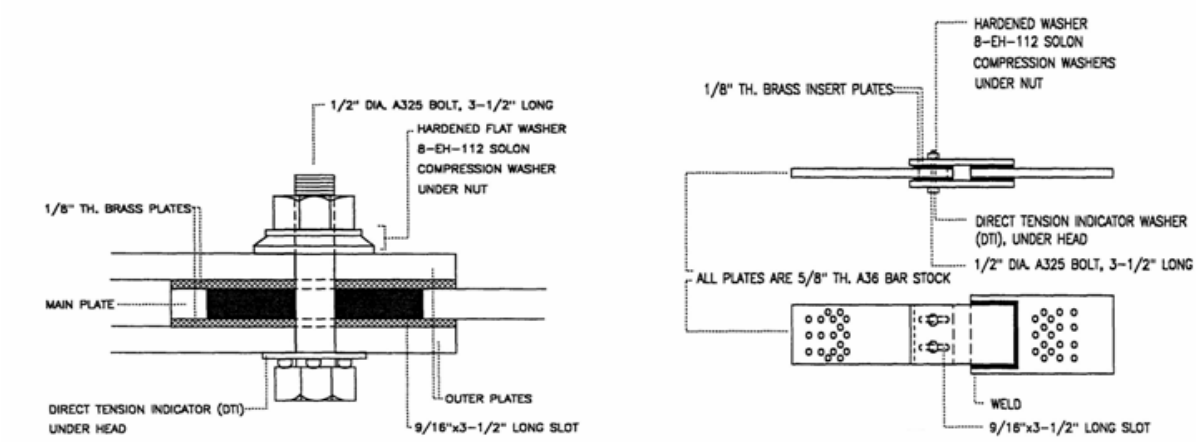

Figure 6. Tested friction device assembly (Grigorian, Yang and Popov, 1992)

Analytical Model of Structural Retrofit. A new model was developed with the new braces (Fig. 9), and a site-specific response spectrum analysis was performed. The spectrum for a 475-year return event (10% probability of exceedence in 50 years) was considered in the analysis (Fig. 10). Preliminary braced frame members were then designed based on forces generated from the response spectrum reduced to the equivalent code-level static base shear. Preliminary values for the friction slip-forces were then determined by rounding the brace forces up to the next even 7.5-kip increment (based on the ½”-diameter A325 bolts).

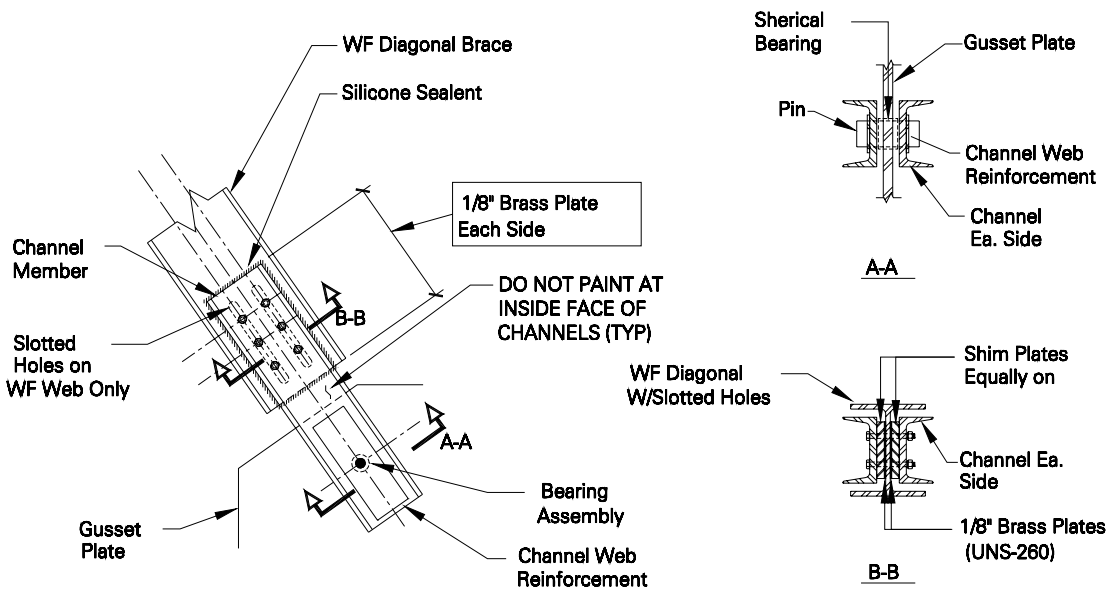

Figure 7. Project friction damper detail

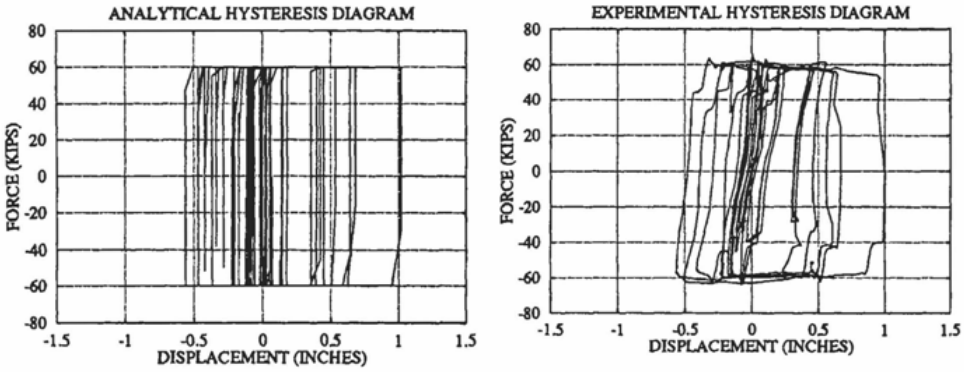

Figure 8. Hysteresis diagram for tested assembly (Grigorian, Yang and Popov, 1992)

Nonlinear pushover analysis. To evaluate the performance of the building with the selected friction values, a nonlinear static pushover analysis was conducted. Hinge definitions for frame elements were based on FEMA 273 guidelines. Two types of nonlinear hinges were specified for the existing econcrete frame elements: 1) biaxial (PMM) hinges were placed near the top and bottom of the columns, and near each end of the beams, and 2) shear hinges were

placed at the midspan of the beams and columns. For the new braces, friction devices were defined as perfectly plastic force-displacement nonlinear hinges and placed at mid-length of the brace.

Figure 9. Model of structural retrofit

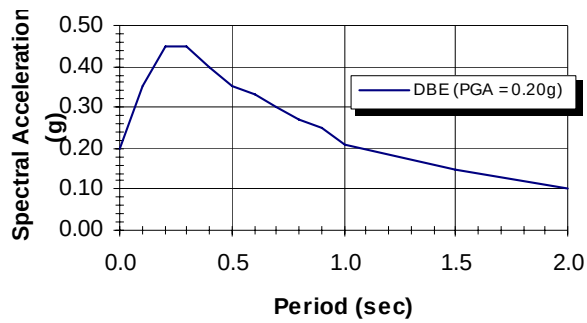

Figure 10. Site specific response spectrum

The structure was initially loaded to a gravity loading equal to 110% of the dead load and 27.5% of the unreduced live load. Next, step-by-step lateral loading in the x- and y- directions was applied to the structure. Two separate and independent lateral load patterns were considered: (1) a force pattern corresponding to the story displacements from the response spectrum analysis with 100% and 30% loading in each direction and (2) a uniform force pattern with 100% and 30% loading in each direction.

Several iterations of analysis and friction hinge adjustments were performed in order to arrive at a performance point that yielded acceptable levels of hinging (Life Safety) in the existing structural elements. The pushover curve for the critical load case (E-W direction) yields a performance point at a displacement of 0.84” corresponding to a base shear of 948 kips (0.27g). At this displacement, no yielding for any of the existing concrete elements occurs (i.e., the structure remains elastic). With this analysis complete, the braced frame system design can be finalized, including sizing of beams, columns, braces, collectors, foundations, and their respective connections.

Time History Analysis. In order to validate the findings from the pushover analysis, a site-specific nonlinear time history analysis was performed on the retrofit model (Fig. 11). Friction devices were defined as nonlinear (plastic) links with yield strengths corresponding to their respective slip forces. Fig. 12 shows the response of the building for conditions both before and after implementation of the retrofit. The displacement of the 4th level was reduced from 4.8” to 0.82” as a result of the seismic retrofit. Drift at the 2nd floor level was reduced from 3.6” (1.7%) to 0.38” (0.2%). It should be noted, however, that due to the limited amount of reinforcement and ductile detailing of the existing concrete frame elements, the structure prior to retrofit would likely collapse before reaching a drift of 3.6” at the 2nd floor level.

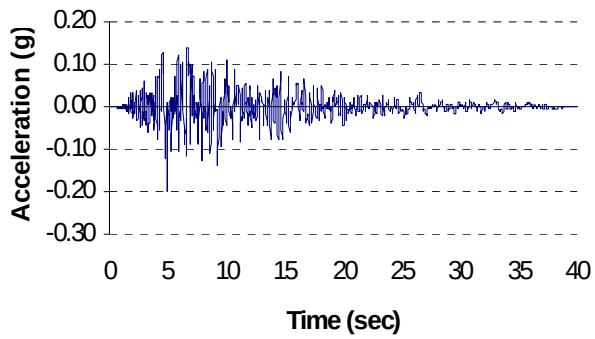

Figure 11: Site-specific time history record

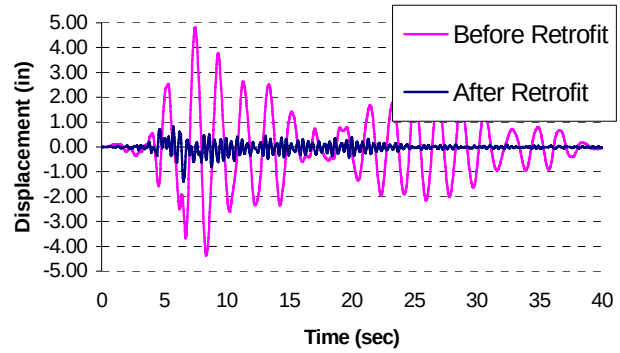

Figure 12: Time history 4th floor displacement (E-W direction)

The hysteresis diagram for a typical friction damper at the 1st story (south elevation) shows a relatively large amount of energy dissipation occurring in the first several seconds of the time history followed by elastic behavior of the brace elements (Fig. 13). Furthermore, the results of the time history analysis compare closely to those of the pushover analysis (Table 2), thus validating the design.

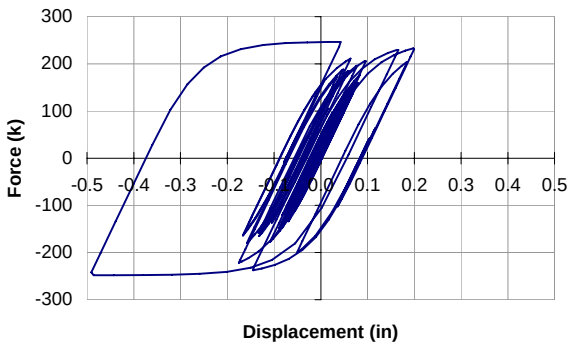

Figure 13. Hysteresis for friction damper, South elevation, 1st story

Table 2. Comparison summary

Analysis	Roof Displ., Δ_Y	Base Shear, V_Y
Time History	0.82”	924 k (0.26g)
Pushover	0.84”	948 k (0.27g)
% Difference	2.5%	2.6%

Conclusion

The use of performance based-engineering and state of the art technologies made possible the restoration and renovation of this historic landmark building (Fig. 14). The use of friction dampers resulted in a cost effective seismic rehabilitation with predictable performance. Total construction costs are estimated at $135/SF, with $18/SF for structural, including $9/SF for seismic retrofit components.

Figure 14. East End Lofts/Elliott Building, June 2004

References

BSSC, 1997 *FEMA 273, NEHRP Guidelines for the Seismic Rehabilitation of Buildings,* Building Seismic Safety Council, Washington, D.C.

CSI, 2002, *ETABS 7.2.2, Linear and Nonlinear Static Dynamic Analysis and Design of Building Systems,* Computers and Structures, Inc., Berkley, CA

Grigorian, C.E., Yang, T. and Popov, E.P., *Slotted Bolted Connection Energy Dissipaters*, "Steel Tips, July 1992", Earthquake Engineering Research Center, Berkley, CA

ICBO, 1997, *Uniform Building Code, Structural Engineering Design Provisions*, "Vol. 2, 1997 edition", International Conference of Building Officials, Whittier, CA

Wallace-Kuhl, 2001, *Existing Building Investigation Report for 1530 J Street Building,* West Sacramento, CA